Davenport Lift Control

Tel: 02085048286 Fax: 02085048297

KLS2 Surface mounted swipe reader

KLS2/W26/S

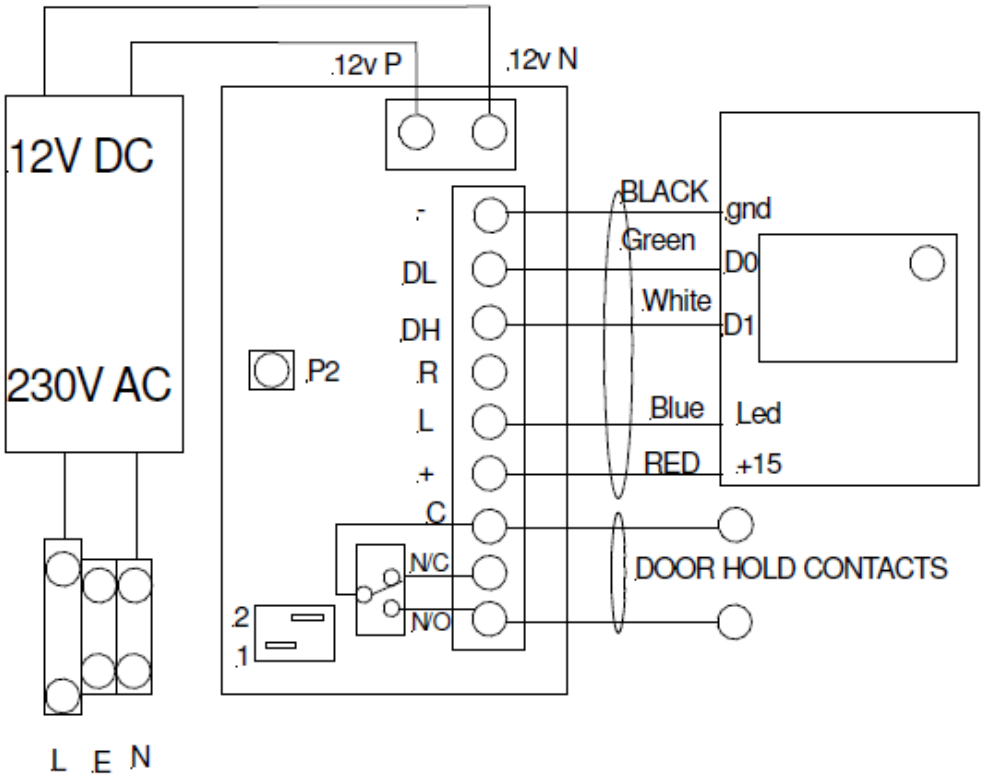

To program the KLS2

Press the P2 button – a red L.E.D will light up (you are now in program mode)

Touch key fob on reader, short bleep will sound and a red L.E.D will light in the middle of the PCB this indicates the fob has been programmed.

Repeat for any additional key fobs.

DIP switch settings

1 off 2off =2 sec

1 off 2 on =3 sec

1 on 2 on =4sec

The relay will stay closed after a swipe